REFRIGERATION AND AIR CONDITIONING

INSTRUCTIONS

EKC 202C-MS
NTC, Multi sensor

084R8038

RI8PN353

084R8038

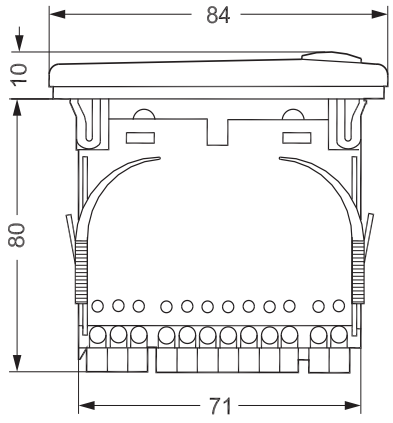

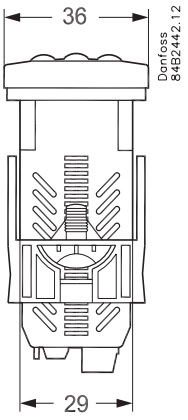

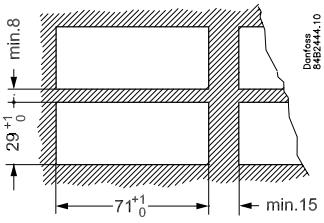

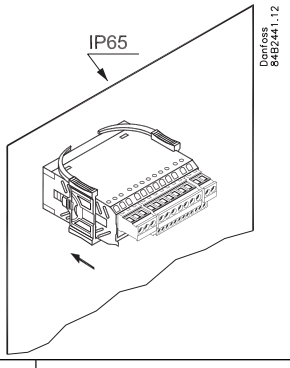

t_{amb} = 0 - +55°C

230 V a.c.

50/60 Hz

2.0 VA

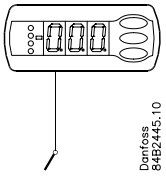

Sensor type = NTC
(Menu = o06)

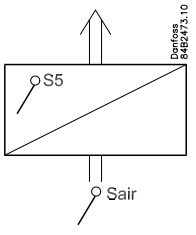

10 V < U < 256 V

	CE (250 V a.c.)	UL *** (240 V a.c.)
DO1. Refrigeration *	8 (6) A	10 A Resistive 5FLA, 30LRA
DO2. Defrost *	8 (6) A	10 A Resistive 5FLA, 30LRA
DO3. Fan *	6 (3) A	6 A Resistive 3FLA, 18LRA 131 VA Pilot duty
DO4. Alarm or light *	4 (1) A Min. 100 mA**	4 A Resistive 131 VA Pilot duty

* DO1 and DO2 are 16 A relays. DO3 and DO4 are 8 A relays. Max. load must be kept.
** Gold plating ensures make function with small contact loads
*** UL-approval based on 30000 couplings

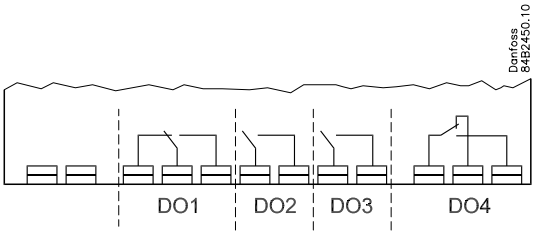

Data communication LON RS 485 / MOD-bus:

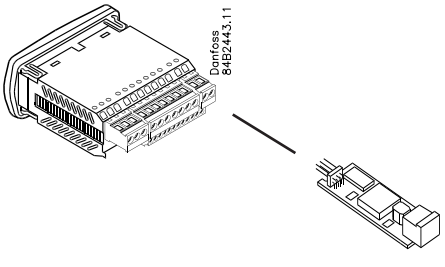

LON

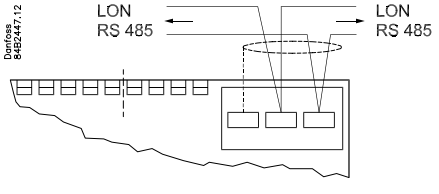

MOD-bus

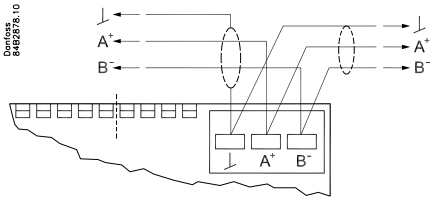

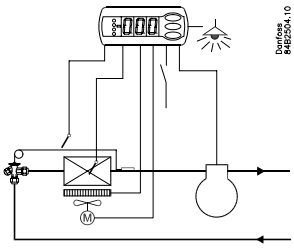

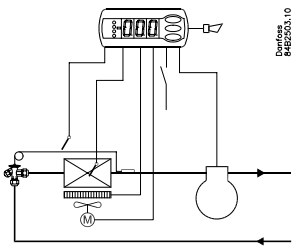

*) AU:
Guld, Gold or Oro
ℓ = max. 15 m

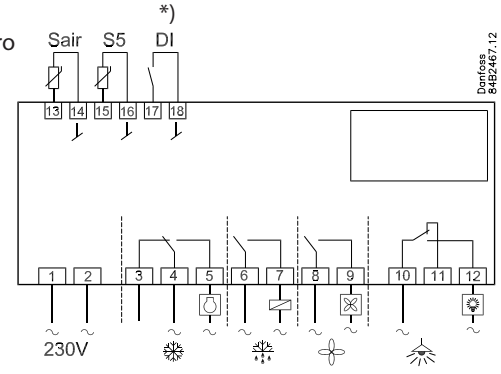

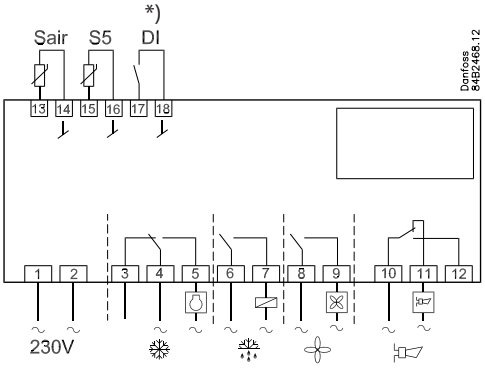

Sair, S5=
NTC 5000 Ω @ 25°C, M2020 (Danfoss type=EKS 211) /
NTC 10000 Ω @ 25°C, Beta 3435 (Danfoss type=EKS 221) /
NTC 3000 Ω @ 25°C /
NTC 2500 Ω @ 0°C /
NTC 10000 Ω @ 25°C /
NTC 2000 Ω @ 25°C

Type	NTC 5000 Ω @ 25°C (M2020)	NTC 10000 Ω @ 25°C (Beta 3435)	NTC 3000 Ω @ 25°C	NTC 2500 Ω @ 0°C	NTC 10000 Ω @ 25°C	NTC 2000 Ω @ 25°C
Danfoss NTC =	*EKS 211*	*EKS 221*	-	-	-	-
°C	Ω	Ω	Ω	Ω	Ω	Ω
30	4029	8313	2417	-	8300	1651
25	**5000**	**10000**	**3000**	883	**10000**	**2000**
20	6246	12091	3747	1074	12271	2437
15	7855	14695	4712	1313	15146	2987
10	9951	17958	5970	1616	18809	3682
5	12696	22068	7617	2000	23504	4571
0	16330	27278	9798	**2492**	29564	5716
–5	21166	33922	12700	3124	37441	7198
–10	27681	42450	16608	3947	47754	9133
–15	36503	53468	21902	5019	61357	11644
–20	48614	67801	29168	6434	79440	14961
–25	65333	86580	39200	8306	103676	19402
–30	88766	111364	53259	10822	136428	25388
–35	121795	144324	73077	14217	181078	33505
–40	169157	188500	101490	18848	242495	44657
Alternativer Alternatives Alternativen Alternatives Alternativas		Carel: HP/WF/WP/INF Dixell: NS/NG/NX/NY/NT Eliwell: SN8 Lae: SN4K..P	Frigo: M841	Wurm: TRK 277	Wurm: T2000	Lae: SN2K..P
o06	n01	n02	n03	n04	n05	n06

The buttons

Set menu
1. Push the upper button until a parameter is shown
2. Push the upper or the lower button and find that parameter you want to change
3. Push the middle button until the parameter value is shown
4. Push the upper or the lower button and select the new value
5. Push the middle button again to enter the value.

Set temperature
1. Push the middle button until the temperature value is shown
2. Push the upper or the lower button and select the new value
3. Push the middle button to select the setting.

Reading the temperature at sensor S5
• Push briefly the lower button

Manual start or stop of a defrost
• Push the lower button for four seconds.

Light Emitting Diode
= refrigeration
= defrost
= fan running
Flashes fast at alarm

Cutout alarm relay / see alarm code
• Push briefly the upper button

Start-up:

Regulation starts when the voltage is on.

1 Go through the survey of factory settings. Make any necessary changes in the respective parameters.
2 For network. Set the address in o03 and then transmit it to the gateway/system unit with setting o04.

SW = 1.3x

Parameters Function	Codes	Min.-value	Max.-value	Factory setting	Actual setting
Normal operation					
Temperature (set point)	---	-50°C	50°C	2°C	
Thermostat					
Differential	r01	0,1 K	20 K	2 K	
Max. limitation of setpoint setting	r02	-49°C	50°C	50°C	
Min. limitation of setpoint setting	r03	-50°C	49°C	-50°C	
Adjustment of temperature indication	r04	-20 K	20 K	0.0 K	
Temperature unit (°C/°F)	r05	°C	°F	°C	
Correction of the signal from Sair	r09	-10 K	10 K	0 K	
Manual service(-1), stop regulation(0), start regulation (1)	r12	-1	1	1	
Displacement of reference during night operation	r13	-10 K	10 K	0 K	
Activation of reference displacement r40	r39	OFF	on	OFF	
Value of reference displacement (can be activated by r39 or DI)	r40	-50 K	50 K	0 K	
Alarm					
Delay for temperature alarm	A03	0 min	240 min	30 min	
Delay for door alarm	A04	0 min	240 min	60 min	
Delay for temperature alarm after defrost	A12	0 min	240 min	90 min	
High alarm limit	A13	-50°C	50°C	8°C	
Low alarm limit	A14	-50°C	50°C	-30°C	
Alarm delay DI1	A27	0 min	240 min	30 min	
High alarm limit for condenser temperature (o70)	A37	0°C	99°C	50°C	
Compressor					
Min. ON-time	c01	0 min	30 min	0 min	
Min. OFF-time	c02	0 min	30 min	0 min	
Compressor relay must cutin and out inversely (NC-function)	c30	0 / OFF	1 / on	0 / OFF	
Defrost					
Defrost method (none/EL/gas)	d01	no	gas	EL	
Defrost stop temperature	d02	0°C	25°C	6°C	
Interval between defrost starts	d03	0 hours	240 hours	8 hours	
Max. defrost duration	d04	0 min	180 min	45 min	
Displacement of time on cutin of defrost at start-up	d05	0 min	240 min	0 min	
Drip off time	d06	0 min	60 min	0 min	
Delay for fan start after defrost	d07	0 min	60 min	0 min	
Fan start temperature	d08	-15°C	0°C	-5°C	
Fan cutin during defrost 0: Stopped 1: Running 2: Running during pump down and defrost	d09	0	2	1	
Defrost sensor (0=time, 1=S5, 2=Sair)	d10	0	2	0	
Max. aggregate refrigeration time between two defrosts	d18	0 hours	48 hours	0 hours	
Defrost on demand - S5 temperature's permitted variation during frost build-up. On central plant choose 20 K (=off)	d19	0 K	20 K	20 K	
Fans					
Fan stop at cutout compressor	F01	no	yes	no	
Delay of fan stop	F02	0 min	30 min	0 min	
Fan stop temperature (S5)	F04	-50°C	50°C	50°C	
Real time clock					
Six start times for defrost. Setting of hours. 0=OFF	t01-t06	0 hours	23 hours	0 hours	
Six start times for defrost. Setting of minutes. 0=OFF	t11-t16	0 min	59 min	0 min	
Clock - Setting of hours	t07	0 hours	23 hours	0 hours	
Clock - Setting of minute	t08	0 min	59 min	0 min	
Clock - Setting of date	t45	1	31	1	
Clock - Setting of month	t46	1	12	1	
Clock - Setting of year	t47	0	99	0	

Miscellaneous					
Delay of output signals after start-up	o01	0 s	600 s	5 s	
Input signal on DI1. Function: 0=not used. 1=status on DI1. 2=door function with alarm when open. 3=door alarm when open. 4=defrost start (pulse-signal). 5=ext.main switch. 6=night operation 7=change reference (activate r40). 8=alarm function when closed. 9=alarm function when open. 10=case cleaning (pulse signal). 11=Inject off when open.	o02	0	11	0	
Network address	o03	0	119	0	
On/Off switch (Service Pin message)	o04	OFF	ON	OFF	
Access code 1 (all settings)	o05	0	100	0	
Used sensor type: n01: NTC 5000 Ω @ 25°C, M20202 (Danfoss type=EKS 211) n02: NTC 10000 Ω @ 25°C, Beta 3435 (Danfoss type= EKS 221) n03: NTC 3000 Ω @ 25°C n04: NTC 2500 Ω @ 0°C n05: NTC 10000 Ω @ 25°C n06: NTC 2000 Ω @ 25°C	o06	n01	n06	n02	
Display step = 0.5 (normal 0.1 at Pt sensor)	o15	no	yes	no	
Max hold time after coordinated defrost	o16	0 min	60 min	20	
Configuration of light function (relay 4) 1=ON during day operation. 2=ON / OFF via data communication. 3=ON follows the DI-function, when DI is selected to door function or to door alarm	o38	1	3	1	
Activation of light relay (only if o38=2)	o39	OFF	ON	OFF	
Case cleaning. 0=no case cleaning. 1=Fans only. 2=All output Off.	o46	0	2	0	
Access code 2 (partly access)	o64	0	100	0	
Save the controllers present settings to the programming key. Select your own number.	o65	0	25	0	
Load a set of settings from the programming key (previously saved via o65 function)	o66	0	25	0	
Replace the controllers factory settings with the present settings	o67	OFF	On	OFF	
Select application for S5 sensor (0=defrost sensor, 1= product sensor, 2=condenser sensor with alarm)	o70	0	2	0	
Select application for relay 4: 1=light, 2= alarm	o72	1	2	2	
Service					
Temperature measured with S5 sensor	u09				
Status on DI1 input. on/1=closed	u10				
Status on night operation (on or off) 1=closed	u13				
Read the present regulation reference	u28				
Status on relay for cooling (Can be controlled manually, but only when r12=-1)	u58				
Status on relay for fans (Can be controlled manually, but only when r12=-1)	u59				
Status on relay for defrost. (Can be controlled manually, but only when r12=-1)	u60				
Temperature measured with Sair sensor	u69				
Status on relay 4 (alarm, light).(Can be controlled manually, but only when r12=-1)	u71				

Factory setting
If you need to return to the factory-set values, it can be done in this way:
- Cut out the supply voltage to the controller
- Keep upper and lower button depressed at the same time as you reconnect the supply voltage

Fault code display		Alarm code display		Status code display	
E1	Fault in controller	A 1	High temperature alarm	S0	Regulating
E6	Change battery + check clock	A 2	Low temperature alarm	S1	Waiting for end of the coordinated defrost
E 27	S5 sensor error	A 4	Door alarm	S2	ON-time Compressor
E 29	Sair sensor error	A 5	Max. Hold time	S3	OFF-time Compressor
		A 15	DI 1 alarm	S4	Drip-off time
		A 45	Standby mode	S10	Refrigeration stopped by main switch
		A 59	Case cleaning	S11	Refrigeration stopped by thermostat
		A 61	Condenser alarm	S14	Defrost sequence. Defrosting
				S15	Defrost sequence. Fan delay
				S16	Refrigeration stopped because of open DI input
				S17	Door open (open DI input)
				S20	Emergency cooling
				S25	Manual control of outputs
				S29	Case cleaning
				S32	Delay of output at start-up
				non	The defrost temperature cannot be displayed. There is stop based on time
				-d-	Defrost in progress / First cooling after defrost
				PS	Password required. Set password